PUBLISHED: 21-NOV-2016
2017.0 DISCOVERY (LR), 308-07

TRANSFER CASE - [+] TWIN SPEED TRANSFER CASE

TRANSFER CASE - V6 S/C 3.0L PETROL (G1972538)

INSTALLATION

41.20.25	TRANSFER GEARBOX - RENEW	3000 CC, AJ V6 (AJ126), SINGLE SPEED TRANSFER CASE	4.2	USED WITHINS	
41.20.25	TRANSFER GEARBOX - RENEW	3000 CC, AJ V6 (AJ126), TWIN SPEED TRANSFER CASE	4.2	USED WITHINS	

INSTALLATION

SPECIAL TOOL(S)

transmissionmanuals.com



303-1069

Adapter, Wrench

transmissionmanuals.com

GENERAL EQUIPMENT

EQUIPMENT NAME
Transmission jack

PART(S)

STEP	PART NAME	QUANTITY
Step 4	Transfer case connecting sleeve O-ring seal	1
Step 11	Driveshaft flange bolts	1

NOTE:

Some variation in the illustrations may occur, but the essential information is always correct.

1.

NOTE:

This step is only required if previously removed.

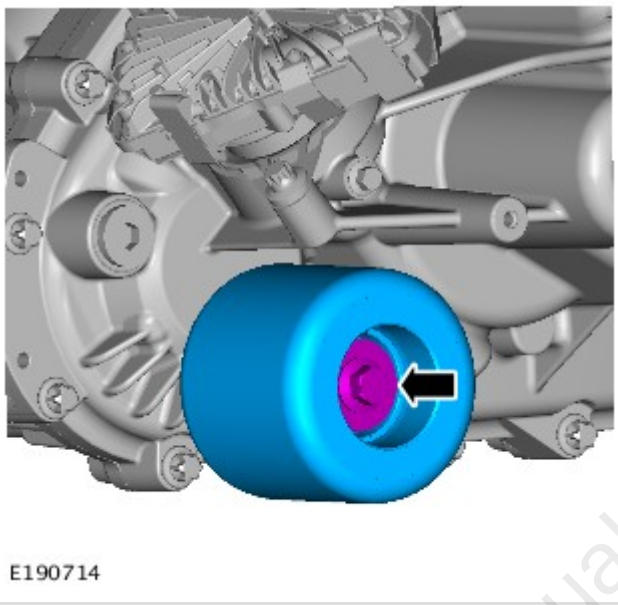

Install the damper

Torque: **72 Nm**

transmissionmanuals.com

2.

NOTE:

This step is only required if previously removed.

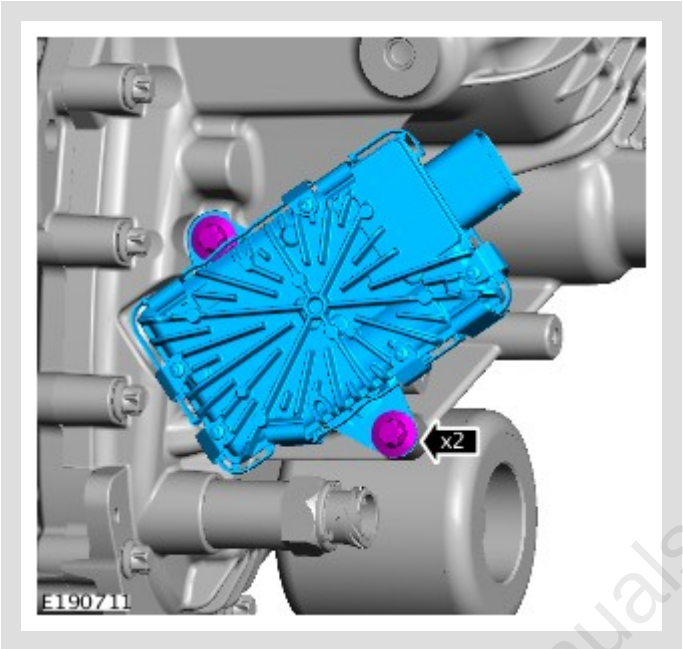

Install the motor.

Torque: **35 Nm**

transmissionmanuals.com

3.

NOTE:

This step is only required if previously removed.

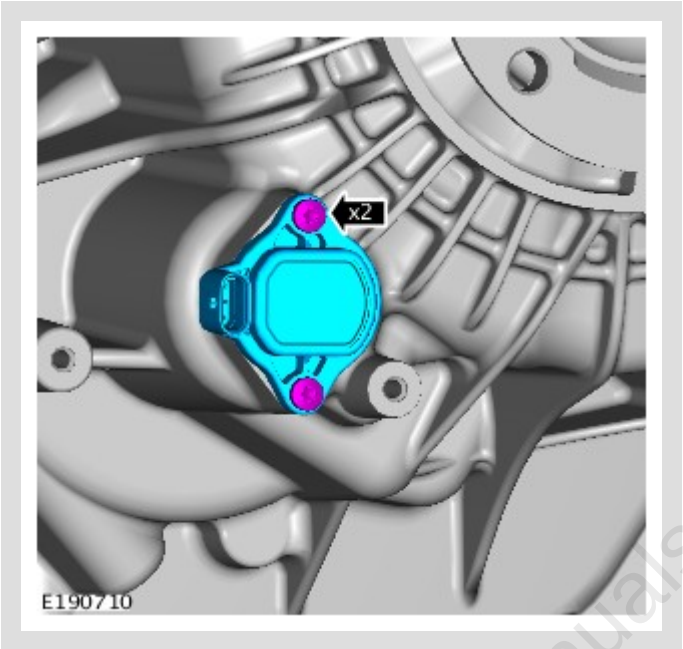

Install the sensor.

Torque: **5 Nm**

transmissionmanuals.com

4.

NOTE:

This step is only required if previously removed.

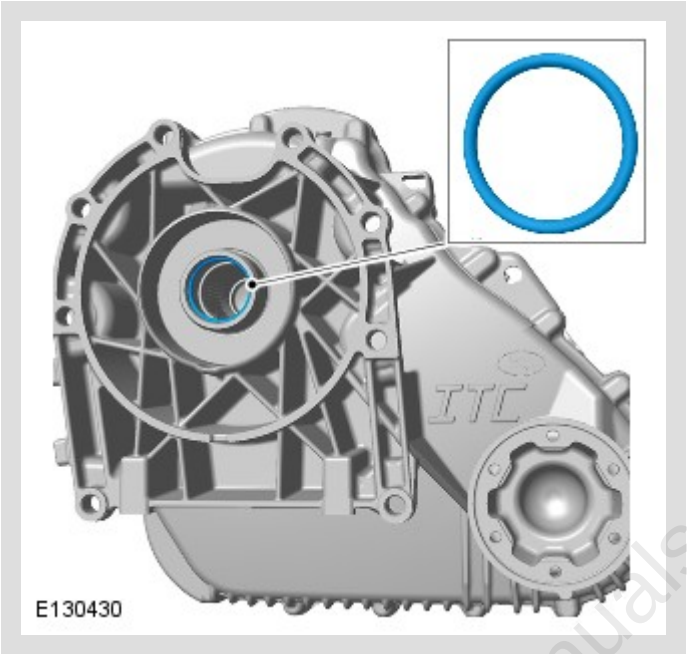

Install a new input shaft oil seal.

Renew Part: *Transfer case connecting sleeve O-ring seal* *Quantity:* *1* .

5.

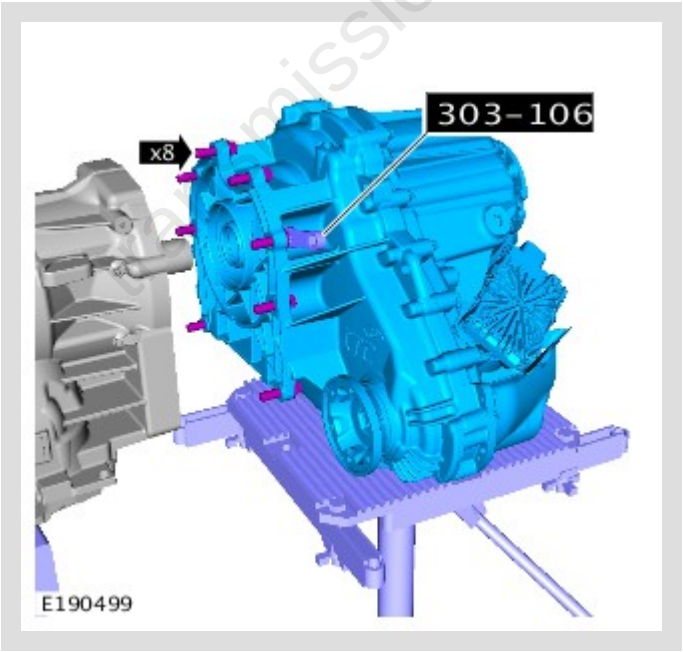

Install the transfer case.

Special Tool(s): 303-1069

General Equipment: Transmission jack

Torque: **45 Nm**

transmissionmanuals.com

6.

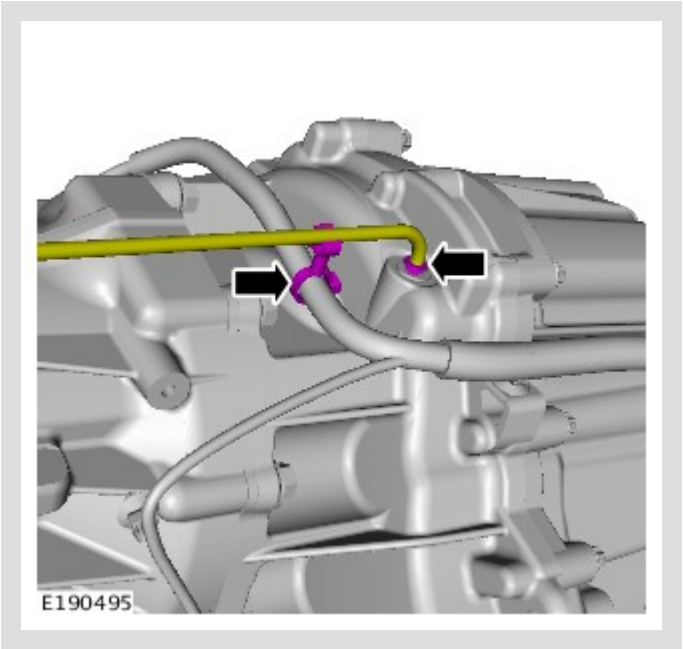

Install the breather pipe.

7.

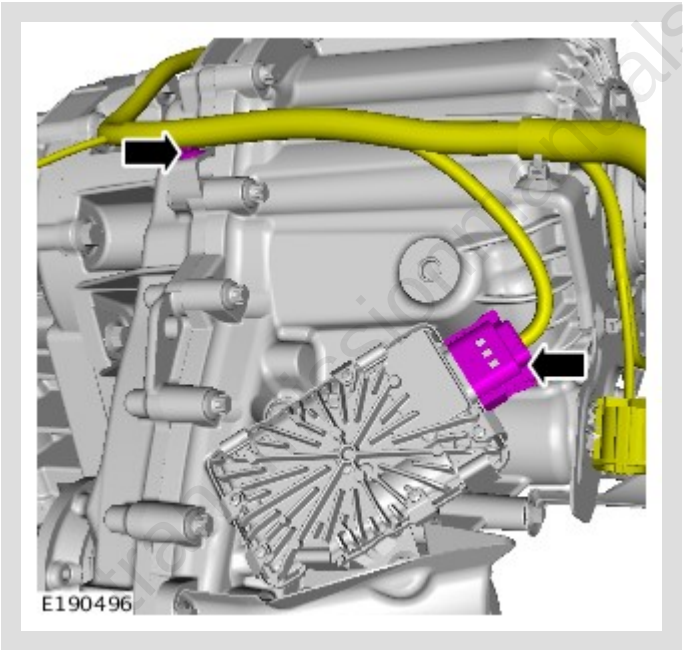

Connect the electrical connector.

8.

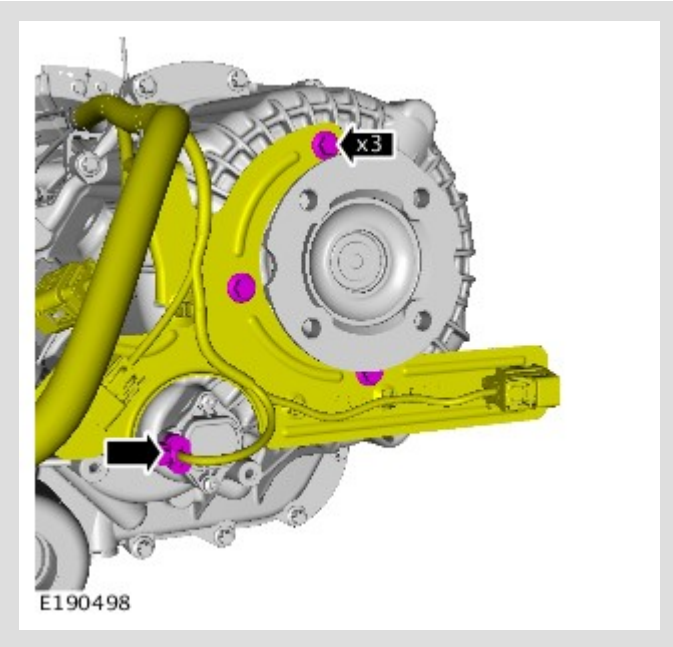

Install the wiring harness.

Torque: **25 Nm**

9.

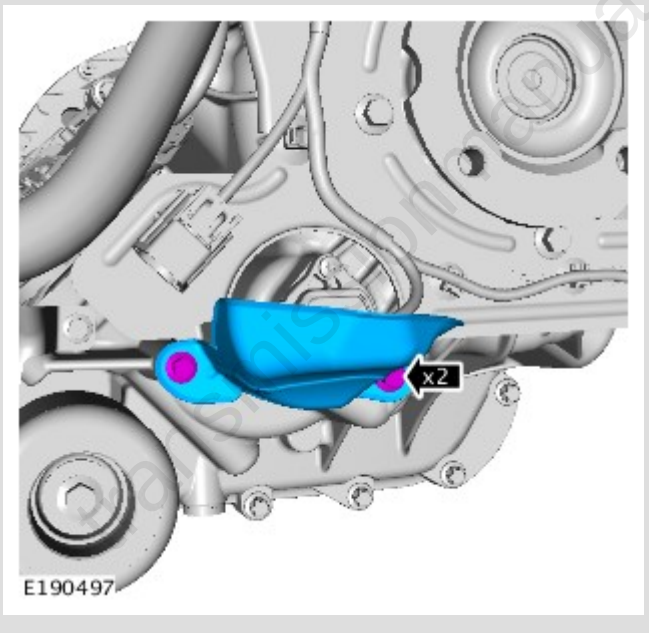

Install the heat shield.

Torque: **8 Nm**

10.

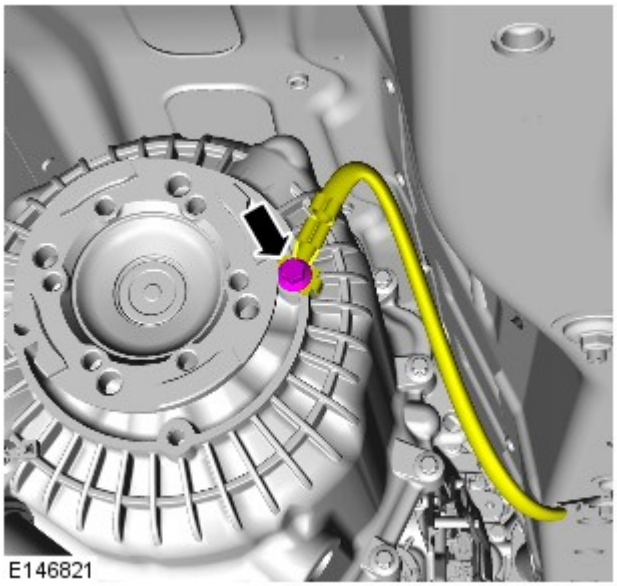

Connect the ground cable.

Torque: **25 Nm**

11.

CAUTION:

Make sure that new bolts are installed.

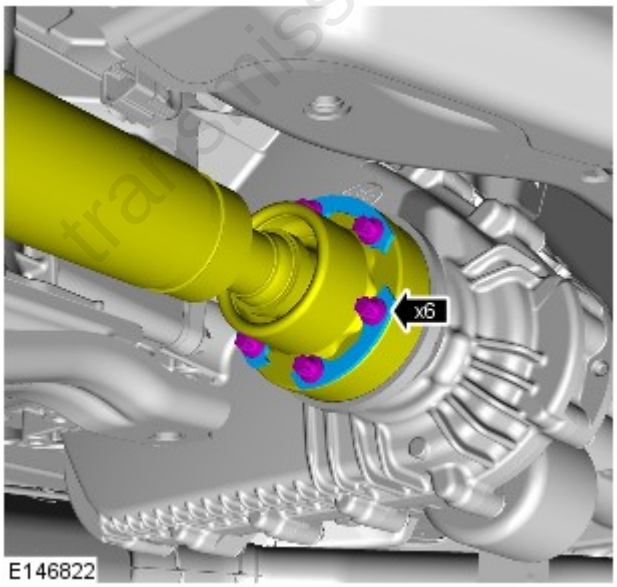

Install the Front driveshaft.

Renew Part: Driveshaft flange bolts Quantity: 1 .

Torque:

Stage 1 **45 Nm**

Stage 2 **90 Nm**

transmissionmanuals.com

12.

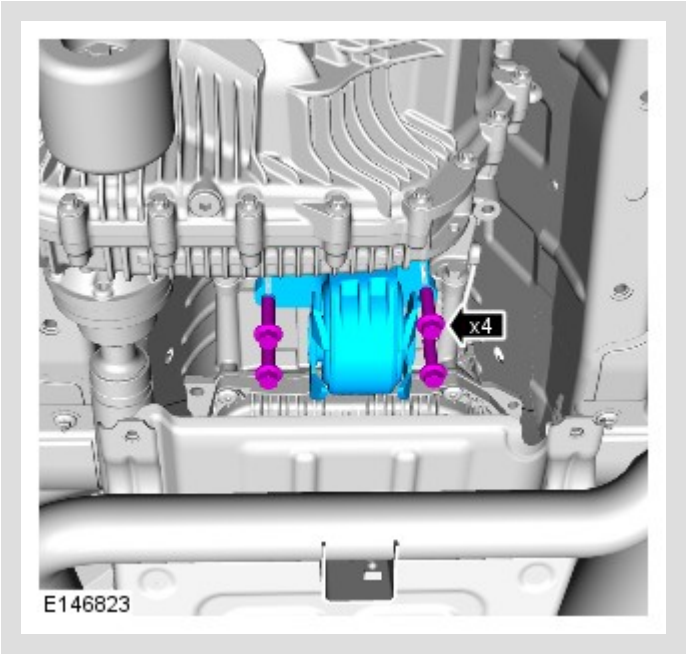

Install the damper.
Torque: 60 Nm

13. Install the rear driveshaft.
Refer to: Rear Driveshaft - V6 S/C 3.0L Petrol (205-01, Removal and Installation).

14. Install the transmission support crossmember.
Refer to: Transmission Support Crossmember - V6 S/C 3.0L Petrol (502-02, Removal and Installation).

15. Connect the battery ground cable.
Refer to: Specifications (414-00, Specifications).

16.

- Calibrate the transfer case using the diagnostic equipment.
- Connect the Land Rover approved diagnostic equipment.
- Start the diagnostic service function "transfer case-transfer case control module replacement".
- Start the service function "transfer case-absolute position sensor replacement".
- Clear any Diagnostic Trouble Codes (DTCs) after calibration and check for correct operation.

17. Fill the transfer case with the recommended fluid.
Refer to: Transfer Case Draining and Filling (308-07, General Procedures).

transmissionmanuals.com

transmissionmanuals.com